60cm Electric Multifunction Oven

BUILT-IN OVEN

PRODUCT CODE: **EO6004ASX**

euro cooking

FEATURES:

- 120 minute auto cut-off timer
- Contained cavity cooling with tangential cooling fan
- Triple glazed removable inner glass
- Removable rack support
- Enamel oven interior
- 10 amp Plug
- Black glass / stainless steel finish
- 5 multi-functions
  - Oven light
  - Fan force
  - Fan grill
  - Full Grill
  - Defrost

3 YEARS Warranty

5 MULTI-FUNCTIONS:

FULL GRILL
Full grill is the perfect option for quick grilling. Toast your favourite meals or finish off the tops of your recipes.

DEFROST
In defrost mode, no heating elements are used. Only the fan is activated to circulate air inside the oven for defrosting. It defrosts food up to 30% faster than traditional methods.

OVEN LIGHT
The oven light will automatically turn on once any function is selected, helps to monitor the progress of your cooking.

FAN FORCED COOKING
For the ultimate roast or perfect batch of pastries. The element surrounding the fan delivers even heat for even cooking results, approx. 160ºC - 180ºC is recommended.

FAN GRILL
This function is perfect for fish, chicken Fillets or meat Cutlets.
This Combination is exceptional for cooking meats such as poultry, game and roasts, making them crispy on the outside and tender in the middle.
The door can be left closed whilst grilling and Browning will occur from the top element.

SPECIFICATIONS:

Electrical Requirements	This oven is supplied with a 10 AMP plug and power cord.
Power Consumption	220-240v – 50/60Hz - 2.1Kw
Oven Volume Capacity	80 litres (gross) - 70 litres (net)
Weight	36.8kg (gross) - 33.3kg (net)

TRIPLE GLAZED REMOVABLE DOOR

This oven is equipped with a triple glazed glass door, ensuring minimal heat will escape during the cooking process. Also to ensure a hassle free clean, the oven door can be easily removed.

CAVITY COOLING SYSTEM

To ensure that control knobs are constantly cool and surrounding cupboards are protected, this oven has a contained cavity cooling system with internal cooling fan.

CLEANING AND MAINTENANCE

Easy clean AAA grade enamel interior.
Clean stainless steel using only recommended stainless steel cleaning products.
No abrasives, corrosive detergents, bleaches or acids not required for cleaning the oven.

PRODUCT DIMENSIONS:

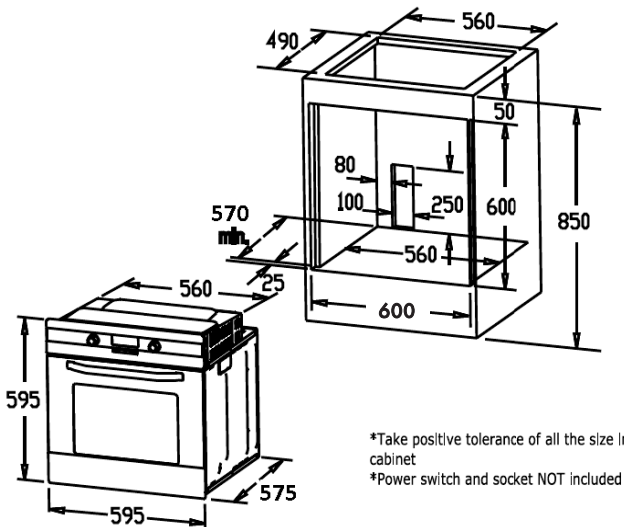

*Take positive tolerance of all the size in the cabinet
*Power switch and socket NOT included